E36/E46 SEAT MOUNT

Part number E36-50-100 | BMW E36 / E46 | Installation Manual

Introduction

The E36-50-100 seat mount lets you fit a fixed-back bucket seat in a BMW E36 or E46. Two side plates hold the seat, and a front and back plate tie the side plates together and bolt the assembly to the car's factory seat mounting points.

The side plates have several rows of holes and slots, so you can choose the seat height and position that suit you.

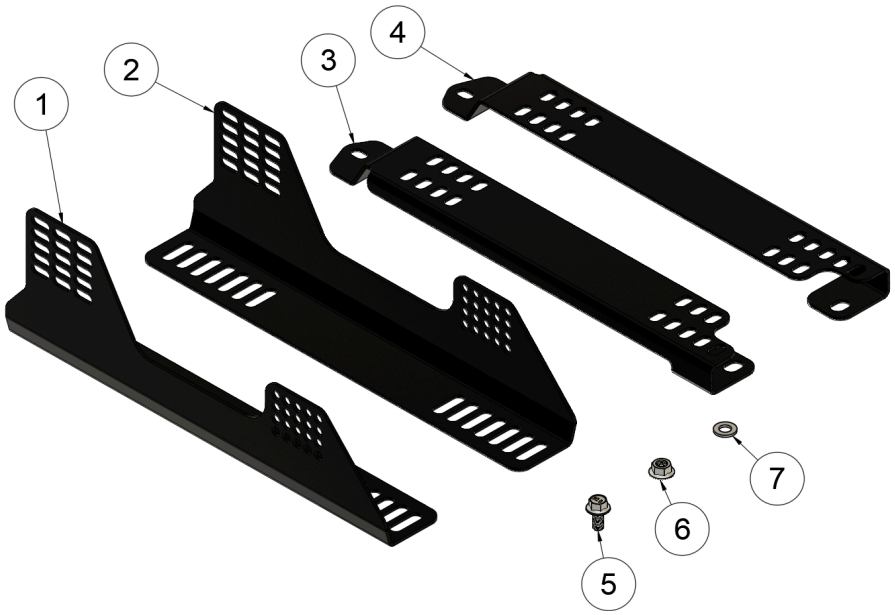

What's in the box

Item	Part number	Description	Qty
1	E36-50-102	Side plate, outside	1
2	E36-50-103	Side plate, inside	1
3	E36-50-104	Front plate	1
4	E36-50-106	Back plate	1
5		M10 x 1.25 x 20 mm flange bolt	4
6		M10 x 1.25 flange nut	4
7		M10 washer	4

Tools you will need

- Metric wrench and socket set
- Torque wrench
- Thread locker
- The seat mounting bolts supplied with your seat
- Safety glasses and gloves

Before you begin

- Read this manual completely and check the box contents against the parts list before you start.
- Bolts for fixing the seat to the side plates are not included. Use the hardware supplied by your seat manufacturer.
- Tighten every fastener to the values in the torque table in Step 5.
- Always have the kit installed by a certified, licensed technician.

Step 1: Remove the factory seat

- Park the car on a level surface and disconnect the negative battery terminal.
- Slide the factory seat fully forward and backward to reach its mounting bolts.
- Unplug any wiring connectors under the seat.
- Remove the seat mounting bolts and lift the seat out of the car. Keep the factory mounting bolts, as you will reuse them in Step 2.

Step 2: Install the base plates in the car

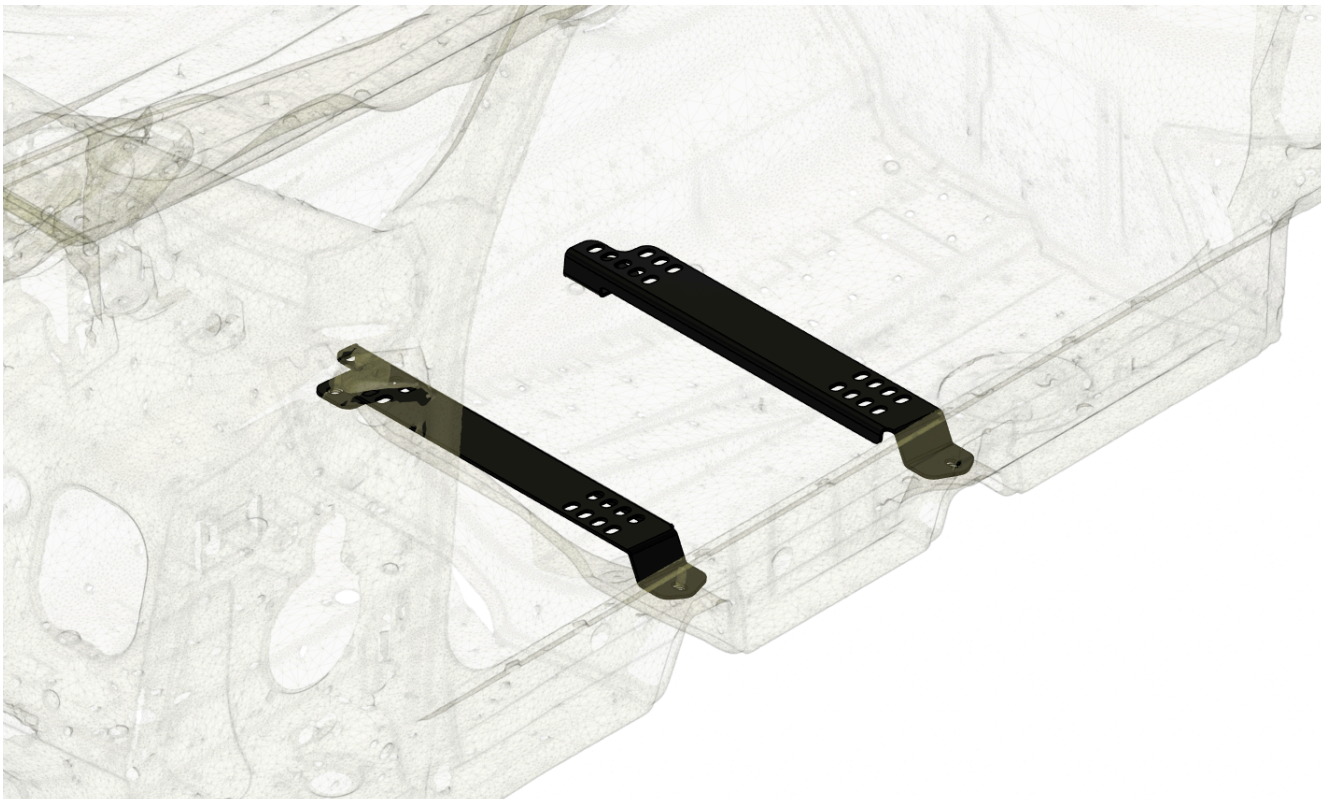

The front plate (E36-50-104) and back plate (E36-50-106) form the base of the seat mount. Install them in the car first.

- Place the front plate over the front factory seat mounting points and the back plate over the rear mounting points.
- Put one M10 washer between the chassis and each end tab, so the washer sits under the plate.
- Install the factory seat bolts through the end tabs and washers into the chassis. Tighten by hand for now.

Step 3: Attach the side plates to the base

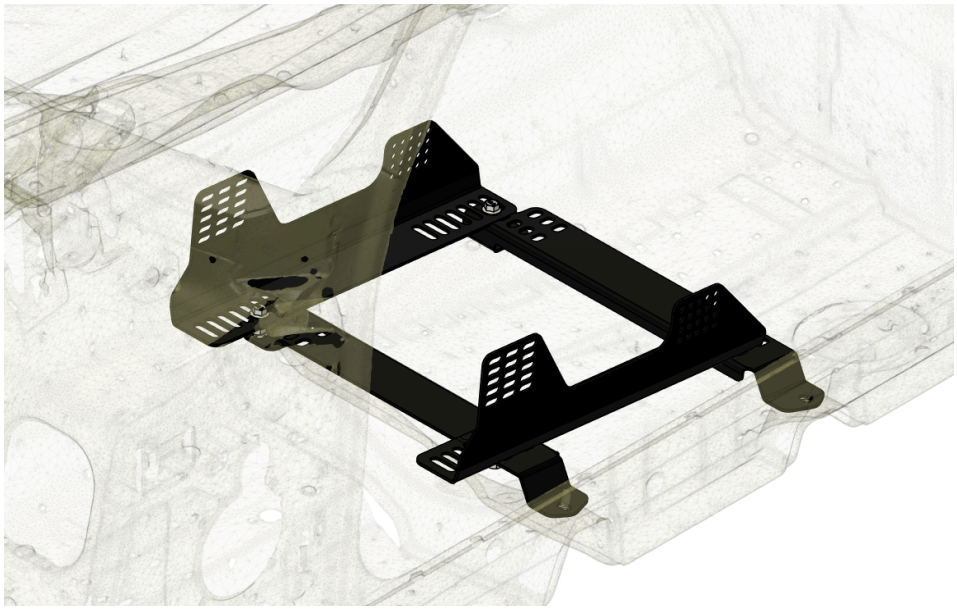

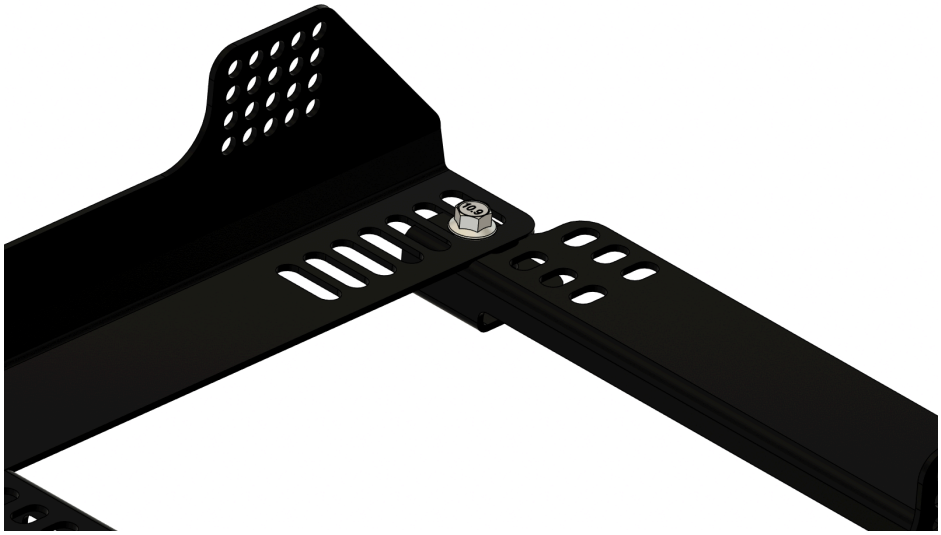

The outside plate (E36-50-102) goes on the door side, and the inside plate (E36-50-103) goes on the tunnel side.

- Set the side plates on the base so the slots in their bottom flanges line up with the slots in the front and back plates.
- Use the slots to set the distance between the side plates to suit the width of your seat.
- Fit one M10 x 1.25 x 20 mm flange bolt and one M10 flange nut at each of the four corners. Tighten by hand for now.

Step 4: Install the seat

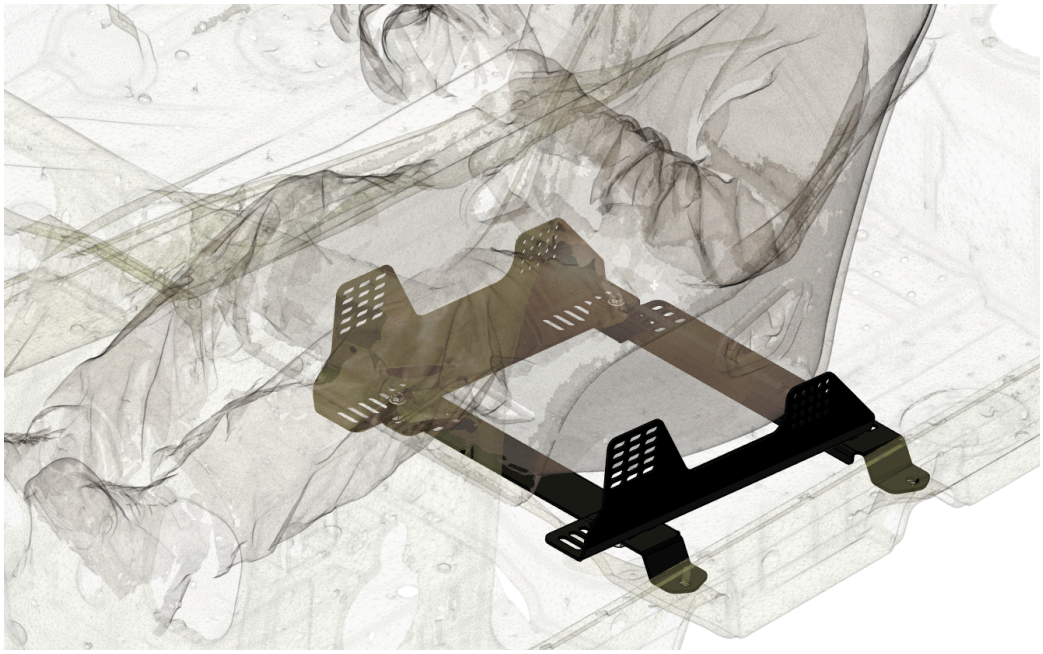

- Lower the seat between the side plates.
- Choose the hole row in the side plates that gives the seat height and angle you want. Use the same holes on both sides so the seat sits level.
- Install the seat manufacturer's bolts through the side plates into the seat. Tighten by hand for now.
- Sit in the seat and check the position. Adjust the hole positions or the side plate slots if needed.

Step 5: Tighten and check

- Tighten all fasteners to the values in the torque table below.
- Reconnect any seat wiring and the battery.
- Check that the seat does not move when you push and pull on it, and that the seat belts or harness are clear of the plates.

Torque specifications

Joint	Fastener	Torque
Seat to side plates	Seat manufacturer's bolts (not included)	Seat manufacturer's specification
Side plates to front and back plates	M10 x 1.25 flange bolt and nut, class 10.9	**55 ± 2 ft-lbs**
Front and back plates to car	Factory seat bolts with M10 washers	BMW factory specification

Maintenance

Check all seat mount bolts regularly, ideally before every event.

Thank you for choosing FDF Raceshop.

Stay connected with FDF Raceshop for new product releases.

Follow us on Facebook, Instagram and YouTube.

https://www.facebook.com/fdfraceshop/

https://www.instagram.com/fdfraceshop/

https://www.youtube.com/@fdfraceshopinstalls